DW733 Main unit PLANER THICKNESSER 1A

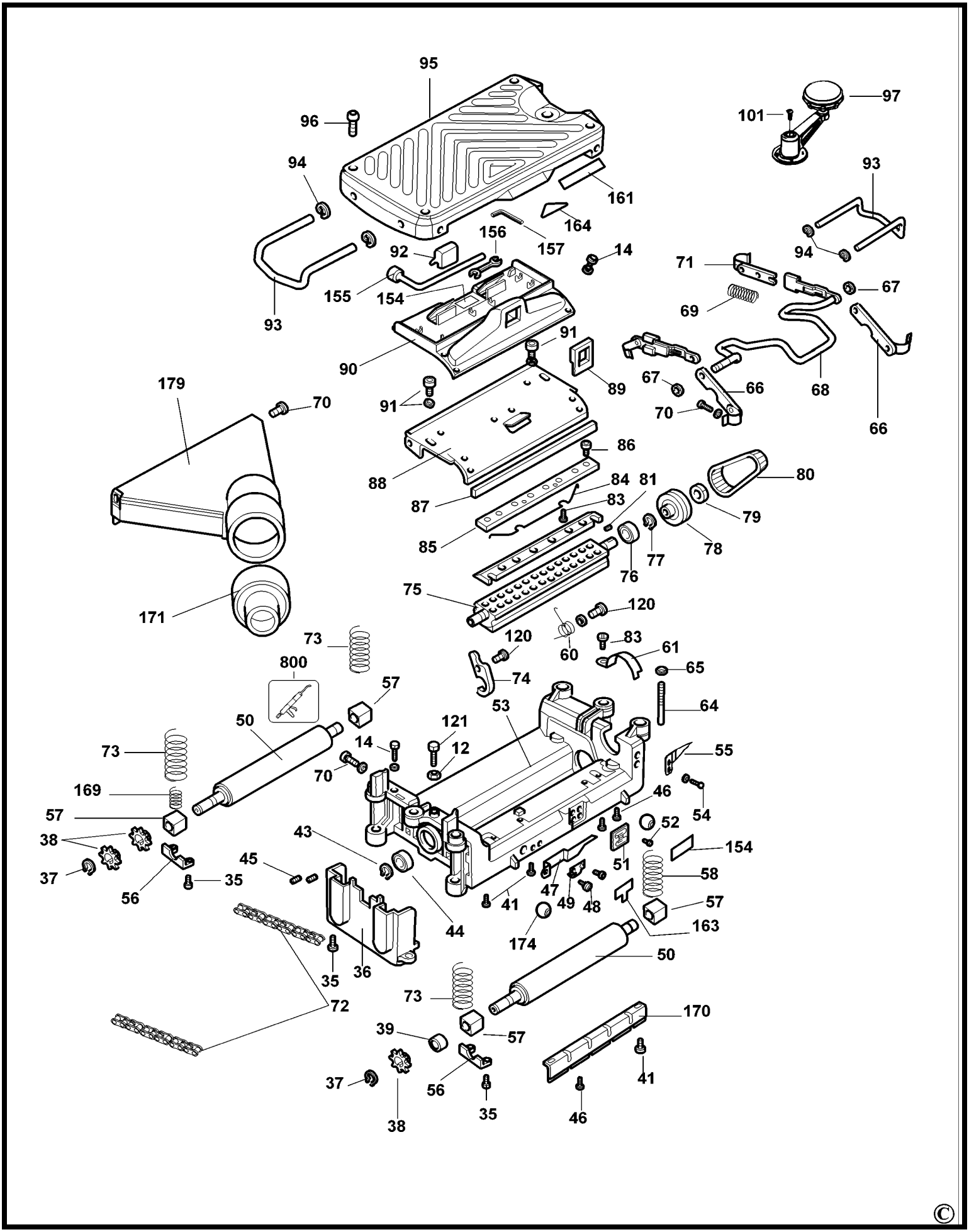

©