DCF680 SCREWDRIVER 1

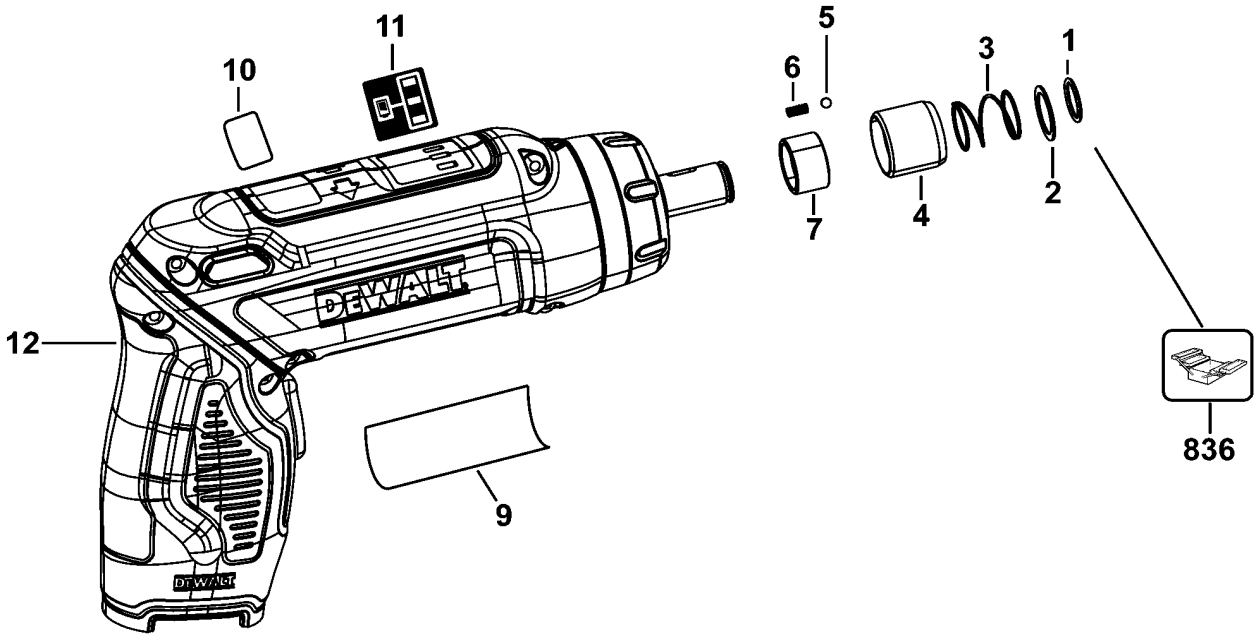

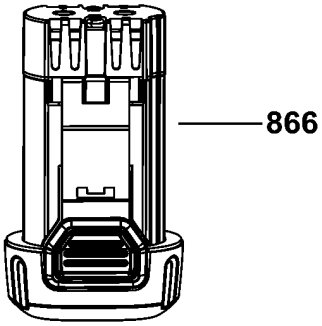

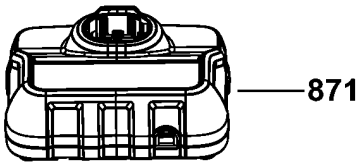

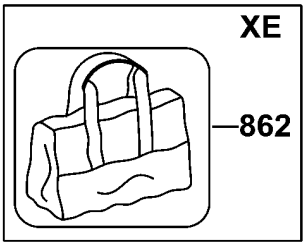

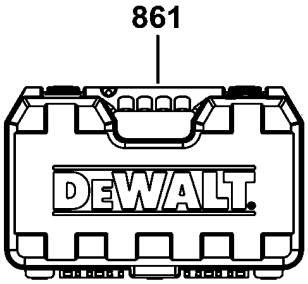

©